ROCKFORD POWERTRAIN®

Power Take-Off Specifications Guide

Rockford®-Style and TD-Style Power Take-Offs

Housing Size	Qty. of Facings	Rockford Powertrain Part No.	Twin Disc® Model No.	Maximum RPM ##	Application (In-Line or Side Load)	Type of Facing	Clutch Torque Capacity lb-ft*	D	E	F
6.5" HE Clutches										
6	1	4-11319	–	3700	Both	Organic	125	5.56	3.50	1.4375/1.4365
5	1	4-11294	–	3700	Both	Organic	125	5.56	3.50	1.4375/1.4365
4	1	4-11236	–	3700	Both	Organic	125	5.56	3.50	1.4375/1.4365
7.5" HE Clutches										
6	1	4-14565	–	3400	Both	Organic	175	5.56	3.50	1.4375/1.4365
5	1	4-11298	–	3400	Both	Organic	175	5.56	3.50	1.4375/1.4365
4	1	4-11238	–	3400	Both	Organic	175	5.56	3.50	1.4375/1.4365
8" HE Clutches										
5	1	4-30974	–	3250	Both	Organic	210	7.06	6.00	1.7500/1.7490
4	1	4-30973	–	3250	Both	Organic	210	7.06	6.00	1.7500/1.7490
3	1	4-30985	–	3250	Both	Organic	210	7.06	6.00	1.7500/1.7490
10" HE Clutches										
4	1	4-11256	–	3000	Both	Organic	460	8.62	5.50	2.2500/2.2490
3	1	4-36003	–	3000	Both	Organic	460	9.25	5.50	2.2500/2.2490
2	1	4-31271	–	3000	Both	Organic	460	9.25	5.50	2.2500/2.2490
10" TD-Style Clutches										
4	1	4-36694	C-110-HP4	3930	Both	Organic	460	8.62	5.50	2.2500
3	1	4-36695	C-110-HP3	3930	Both	Organic	460	8.62	5.50	2.2500
11.5" HE Clutches										
3	1	4-34510	–	2800	Both	Organic	700	9.25	6.50	2.2500/2.2490
3	1	4-34511	–	2800	Both	Metallic	895	9.25	6.50	2.2500/2.2490
3	2	4-34845	–	2800	Both	Organic	1400	9.62	6.50	2.5000/2.4990
3	2	4-34846	–	2800	Both	Metallic	1790	9.62	6.50	2.5000/2.4990
2	1	4-34514	–	2800	Both	Organic	700	9.25	6.50	2.2500/2.2490
2	1	4-34515	–	2800	Both	Metallic	895	9.25	6.50	2.2500/2.2490
2	2	4-11127	–	2800	Both	Organic	1400	9.62	6.50	2.5000/2.4990
2	2	4-17778	–	2800	Both	Metallic	1790	9.62	6.50	2.5000/2.4990
1	1	4-34516	–	2800	Both	Organic	700	9.25	6.50	2.2500/2.2490
1	1	4-34517	–	2800	Both	Metallic	895	9.25	6.50	2.2500/2.2490
1	2	4-11088	–	2800	Both	Organic	1400	9.62	6.50	2.5000/2.4990
1	2	4-27489	–	2800	Both	Metallic	1790	9.62	6.50	2.5000/2.4990
11.5" TD-Style Clutches										
3	1	4-36696	SP-111-HP3	3600	**Both**	**Organic**	700	9.25	**6.50**	2.2500
3	2	4-36697	SP-21 l-HP3	3500	**Both**	**Organic**	1400	**9.62**	6.50	**2.5000**
2	2	4-36698	SP-211-HP2	3500	**Both**	**Organic**	700	**9.62**	6.50	2.2500

NOTE: Refer to page A8 for dimensions A, C, K, L, R, S and Y. All dimensions in inches unless otherwise specified.
Listing subject to change without notice.

* Figure listed is torque capacity of the clutch. To determine the actual clutch torque capacity required for any given application the torque service factor must be considered. Refer to page A8.
** Other Pilot Bearing sizes are available.
Optional high speed drive rings available for most Rockford® -Style PTOs. Nodular iron drive rings furnished on TD-Style PTOs.

The illustrations are shown for identification of dimensions only. They are not intended to necessarily depict the actual size, exact shape or internal configuration of the part numbers listed.

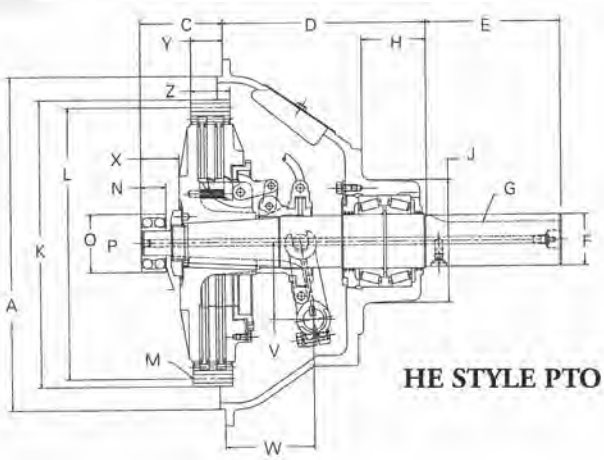

HE STYLE PTO

Rockford®-Style and TD-Style Power Take-Offs

Rockford Powertrain Part No.	G	H	J	M (holes) qty./dia.	N	O **	T (holes) qty./dia.	U	V	W	X	Z
6.5" HE Clutches												
4-11319	3/8x3/16	.81	4.25	6/.328	.5906	2.0472	8/.406	7.75	3.00	2.25	1.22	.62
4-11294	3/8x3/16	.81	4.25	6/.328	.5906	2.0472	8/.406	7.75	3.00	2.25	1.22	.62
4-11236	3/8x3/16	.88	4.50	6/.328	.5906	2.0472	12/.406	7.75	3.00	2.25	1.22	.62
7.5" HE Clutches												
4-14565	3/8x3/16	.81	4.25	8/.328	.5906	2.0472	8/.406	7.75	3.00	2.25	1.22	.62
4-11298	3/8x3/16	.81	4.25	8/.328	.5906	2.0472	8/.406	7.75	3.00	2.25	1.22	.62
4-11238	3/8x3/16	.88	4.50	8/.328	.5906	2.0472	12/.406	7.75	3.00	2.25	1.22	.62
8" HE Clutches												
4-30974	1/2x1/4	2.31	4.00	6/.406	.6693	2.4409	8/.433	7.75	3.00	2.25	1.19	.62
4-30973	1/2x1/4	2.75	4.00	6/.406	.6693	2.4409	12/.433	7.75	3.00	2.25	1.19	.62
4-30985	1/2x1/4	2.31	4.50	6/.406	.6693	2.4409	12/.433	9.75	3.00	2.62	1.19	.62
10" HE Clutches												
4-11256	5/8x5/16	3.75	6.00	8/.406	1.1875	2.8346	12/.433	7.75	3.00	3.25	1.44	.88
4-36003	5/8x5/16	3.75	6.00	8/.406	1.1875	2.8346	12/.433	9.75	3.00	3.75	1.44	.88
4-31271	5/8x5/16	3.75	6.00	8/.406	1.1875	2.8346	12/.433	9.75	3.00	3.25	1.44	.88
10" TD-Style Clutches												
4-36694	5/8x5/16	3.75	5.75	8/.41	–	2.8346	12/.41	7.75	3.00	2.16	1.56	.88
4-36695	5/8x5/16	3.75	5.75	8/.41	–	2.8346	12/.41	9.75	3.00	2.00	1.56	.88
11.5" HE Clutches												
4-34510	5/8x5/16	3.75	6.00	8/.406	1.1875	2.8346	12/.433	9.75	3.00	3.75	1.81	.88
4-34511	5/8x5/16	3.75	6.00	8/.406	1.1875	2.8346	12/.433	9.75	3.00	3.75	1.81	.88
4-34845	5/8x5/16	3.12	6.00	8/.406	1.1875	2.8346	12/.433	9.75	3.75	4.25	1.81	1.88
4-34846	5/8x5/16	3.12	6.00	8/.406	1.1875	2.8346	12/.433	9.75	3.75	4.25	1.81	1.88
4-34514	5/8x5/16	3.75	6.00	8/.406	1.1875	2.8346	12/.433	9.75	3.00	3.25	1.81	.88
4-34515	5/8x5/16	3.75	6.00	8/.406	1.1875	2.8346	12/.433	9.75	3.00	3.25	1.81	.88
4-11127	5/8x5/16	3.12	6.00	8/.406	1.1875	2.8346	12/.433	9.75	3.75	4.25	1.81	1.88
4-17778	5/8x5/16	3.12	6.00	8/.406	1.1875	2.8346	12/.433	9.75	3.75	4.25	1.81	1.88
4-34516	5/8x5/16	3.75	6.00	8/.406	1.1875	2.8346	12/.469	9.75	3.00	3.44	1.81	.88
4-34517	5/8x5/16	3.75	6.00	8/.406	1.1875	2.8346	12/.469	9.75	3.00	3.44	1.81	.88
4-11088	5/8x5/16	3.12	6.00	8/.406	1.1875	2.8346	12/.469	9.75	3.75	4.25	1.81	1.88
4-27489	5/8x5/16	3.12	6.00	8/.406	1.1875	2.8346	12/.469	9.75	3.75	4.25	1.81	1.88
11.5" TD-Style Clutches												
4-36696	5/8x5/16	3.75	5.75	8/.41	-	2.8346	12/.41	9.75	3.00	3.19	1.94	.88
4-36697	5/8x5/16	3.00	6.50	8/.41	-	2.8346	12/.41	9.75	3.75	4.06	2.00	1.88
4-36698	5/8x5/16	3.75	5.75	8/.41	-	2.8346	12/.41	9.75	3.00	3.19	1.94	.88

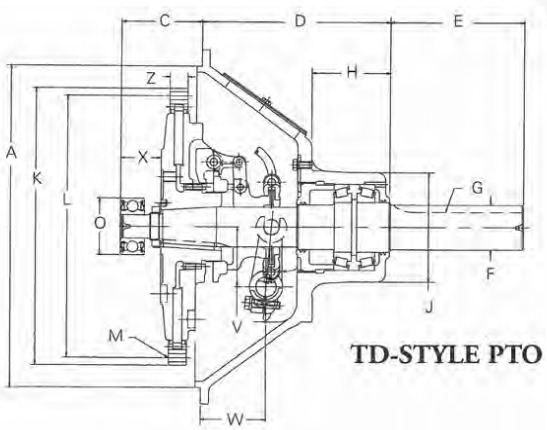

TD-STYLE PTO

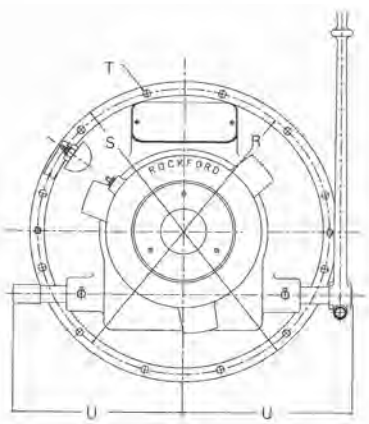

FOLEY ENGINES
Industrial Engines & Parts Since 1916

Rockford®-Style and TD-Style Power Take-Offs

	Housing Size	Qty. of Facings	Rockford Powertrain Part No.	Twin Disc® Model No.	Maximum RPM ##	Application (In-Line or Side Load)	Type of Facing	Clutch Torque Capacity lb-ft*	D	E	F
	14" HD Clutches										
	1	1	4-19061	_	2200	In-Line	Organic	1050	12.12	8.50	3.0000/2.9990
	1	1	4-27464	_	2200	In-Line	Metallic	1345	12.12	8.50	3.0000/2.9990
	1	1	4-11058	_	2200	Side Load	Organic	1050	12.12	8.50	3.0000/2.9990
	1	1	4-25393	_	2200	Side Load	Metallic	1345	12.12	8.50	3.0000/2.9990
•	1	2	4-35469	_	2200	In-Line	Organic	2100	13.50	10.00	3.5000/3.4990
•	1	2	4-35513	_	2200	In-Line	Metallic	2690	13.50	10.00	3.5000/3.4990
	1	2	4-11060	_	2200	Side Load	Organic	2100	13.50	10.00	3.5000/3.4990
	1	2	4-27491	_	2200	Side Load	Metallic	2690	13.50	10.00	3.5000/3.4990
•	1	3#	4-35470	_	2200	In-Line	Organic	3150	12.69	10.00	3.9375/3.9365
•	1	3#	4-35673	_	2200	In-Line	Organic	3150	12.69	10.00	3.9375/3.9365
•	1	3#	4-35514	_	2200	In-Line	Metallic	4035	12.69	10.00	3.9375/3.9365
•	1	3#	4-35726	_	2200	In-Line	Metallic	4035	12.69	10.00	3.9375/3.9365
	1	3#	411074	_	2200	Side Load	Organic	3150	14.50	10.00	3.9375/3.9365
	1	3#	4-34764	_	2200	Side Load	Organic	3150	14.50	10.00	3.9375/3.9365
	1	3#	4-27493	_	2200	Side Load	Metallic	4035	14.50	10.00	3.9375/3.9365
	1	3#	4-33852	_	2200	Side Load	Metallic	4035	14.50	10.00	3.9375/3.9365
	14" TD-Style Clutches ***										
	1	1#	4-36699	SP-114-P1	2200	Both	Organic	1050	12.12	8.50	3.0000
	1	2#	4-36700	SP-214-P1	2200	Both	Organic	2100	13.75	10.00	3.5000
	1	3#	4-36701	SP-314-P1	2200	Both	Organic	3150	14.50	10.00	3.9400
	18" HC Clutches										
	0	2	4-26256		1800	In-Line	Organic	3700	14.31	10.00	3.9375/3.9365
	0	2	4-27488		1800	In-Line	Metallic	4730	14.31	10.00	3.9375/3.9365
	0	2#	4-27487	_	1800	Side Load	Organic	3700	21.81	10.00	3.9375/3.9365
	0	2#	4-17435	_	1800	Side Load	Metallic	4730	21.81	10.00	3.9375/3.9365
•	0	3#	4-35467	_	2100	In-Line	Organic	5550	15.56	10.00	3.9375/3.9365
•	0	3#	4-35495	_	2100	In-Line	Organic	5550	15.56	10.00	3.9375/3.9365
•	0	3#	4-35742	_	2100	In-Line	Metallic	7095	15.56	10.00	3.9375/3.9365
•	0	3#	4-35743	_	2100	In-Line	Metallic	7095	15.56	10.00	3.9375/3.9365
+	0	3#	4-31436	_	2100	Side Load	Organic	5550	23.75	10.00	4.5000/4.4990
+	0	3#	4-34765	_	2100	Side Load	Organic	5550	23.75	10.00	4.5000/4.4990
+	0	3#	4-31437	_	2100	Side Load	Metallic	7095	23.75	10.00	4.5000/4.4990
+	0	3#	4-34766	_	2100	Side Load	Metallic	7095	23.75	10.00	4.5000/4.4990

NOTE: Refer to page A8. for dimensions A, C, K, L, R, S and Y

All dimensions in inches unless otherwise specified.
Listing subject to change without notice.

* Figure listed is torque capacity of the clutch. To determine the actual clutch torque capacity required for any given application the torque service factor must be considered. Refer to page A8.
** Other Pilot Bearing sizes are available.
*** Available - March 1996.
• Pilot bearing is cartridge type (double sealed).
\# Requires a support plate for the housing.
\+ Engine oil lubricated main bearings - External connections required but not furnished with PTO.
\#\# Optional high speed drive rings available for most Rockford®-Style PTOs.
Nodular iron drive rings furnished on TD-Style PTOs.

The illustrations are shown for identification of dimensions only. They are not intended to necessarily depict the actual size, exact shape or internal configuration of the part numbers listed.

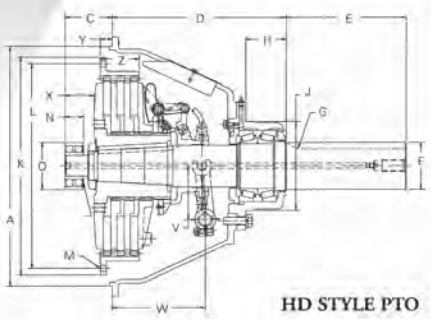

HD STYLE PTO

Rockford®-Style and TD-Style Power Take-Offs

	Rockford Powertrain Part No.	G	H	J	M (holes) qty./dia.	N	O **	T (holes) qty./dia.	U	V	W	X	Z
	14" HD Clutches												
	4-19061	3/4 x 3/8	3.75	6.75	8/.531	.8268	3.1496	12/.484	9.75	4.00	6.00	2.19	1.12
	4-27464	3/4 x 3/8	3.75	6.75	8/.531	.8268	3.1496	12/.484	9.75	4.00	6.00	2.19	1.12
	4-11058	3/4 x 3/8	3.75	6.75	8/.531	1.3750	3.1496	12/.484	9.75	4.00	6.00	2.19	1.12
	4-25393	3/4 x 3/8	3.75	6.75	8/.531	1.3750	3.1496	12/.484	9.75	4.00	6.00	2.19	1.12
•	4-35469	7/8 x 7/16	3.75	7.62	8/.531	1.3750	3.1496	12/.484	9.75	4.00	7.00	2.19	2.12
•	4-35513	7/8 x 7/16	3.75	7.62	8/.531	1.3750	3.1496	12/.484	9.75	4.00	7.00	2.19	2.12
	4-11060	7/8 x 7/16	3.75	7.62	8/.531	1.3750	3.1496	12/.484	9.75	4.00	7.00	2.19	2.12
	4-27491	7/8 x 7/16	3.75	7.62	8/.531	1.3750	3.1496	12/.484	9.75	4.00	7.00	2.19	2.12
•	4-35470	1 x 1/2	1.56	7.87	8/.531	1.5625	3.9370	12/.484	9.75	4.50	7.75	2.44	3.25
•	4-35673	1 x 1/2	1.56	7.87	8/.531	1.3750	3.1496	12/.484	9.75	4.50	7.75	2.44	3.25
•	4-35514	1 x 1/2	1.56	7.87	8/.531	1.5625	3.9370	12/.484	9.75	4.50	7.75	2.44	3.25
•	4-35726	1 x 1/2	1.56	7.87	8/.531	1.3750	3.1496	12/.484	9.75	4.50	7.75	2.44	3.25
	4-11074	1 x 1/2	3.38	7.50	8/.531	1.5625	3.9370	12/.484	9.75	4.50	7.75	2.50	3.25
	4-34764	1 x 1/2	3.38	7.50	8/.531	1.3750	3.1496	12/.484	9.75	4.50	7.75	2.50	3.25
	4-27493	1 x 1/2	3.38	7.50	8/.531	1.5625	3.9370	12/.484	9.75	4.50	7.75	2.50	3.25
	4-33853	1 x 1/2	3.38	7.50	8/.531	1.3750	3.1496	12/.484	9.75	4.50	7.75	2.50	3.25
	14" TD-Style Clutches* **												
	4-36699	3/4 x 3/8	3.44	6.66	8/.53"	-	3.1496	12/.47	9.75	4.50	5.44	2.56	1.13
	4-36700	7/8 x 7/16	3.38	7.50	8/.53"	-	3.1496	12/.47	9.75	4.50	6.63	2.50	2.38
	4-36701	1 x 1/2	3.38	7.50	8/.53"	-	3.1496	12/.47	9.75	4.50	7.75	2.50	3.38
	18" HC Clutches												
	4-26256	1 x 1/2	1.06	_	6/.656	.9843	3.9370	16/.546	12.7	5.12	8.50	2.38	3.06
	4-27488	1 x 1/2	1.06	_	6/.656	.9843	3.9370	16/.546	12.7	5.12	8.50	2.38	3.06
	4-27487	1 x 1/2	8.56	_	6/.656	1.5625	3.9370	16/.546	12.7	5.12	8.50	2.38	3.06
	4-17435	1 x 1/2	8.56	_	6/.656	1.5625	3.7370	16/.546	12.7	5.12	8.50	2.38	3.06
•	4-35467	1 x 1/2	1.56	_	6/.656	1.3125	3.7370	16/.546	12.7	5.12	10.50	2.69	4.69
•	4-35495	1 x 1/2	1.56	_	6/.656	1.9375	4.7244	16/.546	12.7	5.12	10.50	2.69	4.69
•	4-35742	1 x 1/2	1.56	_	6/.656	1.3125	3.9370	16/.546	12.7	5.12	10.50	2.69	4.69
•	4-35743	1 x 1/2	1.56	_	6/.656	1.9375	4.7244	16/.546	12.7	5.12	10.50	2.69	4.69
+	4-31436	1 x 1/2	9.75	_	6/.656	1.9375	4.7244	16/.546	12.7	5.12	10.50	2.69	4.69
+	4-34765	1 x 1/2	9.75	_	6/.656	1.5625	3.9370	16/.546	12.7	5.12	10.50	2.69	4.69
+	4-31437	1 x 1/2	9.75	_	6/.656	1.9375	4.7244	16/.546	12.7	5.12	10.50	2.69	4.69
+	4-34766	1 x 1/2	9.75	_	6/.656	1.5625	3.9370	16/.546	12.7	5.12	10.50	2.69	4.69

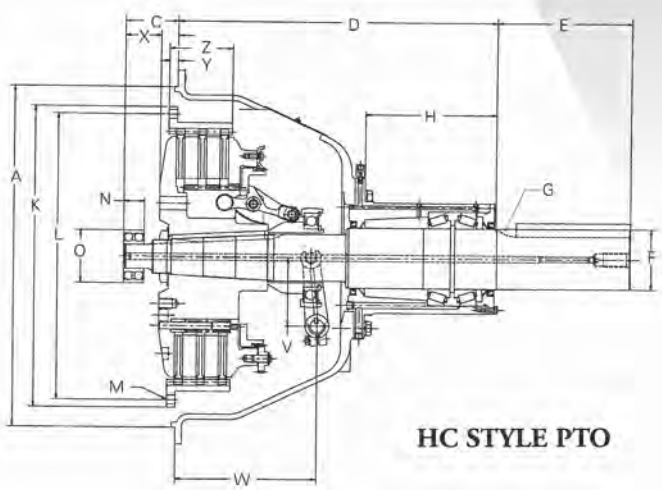

HC STYLE PTO

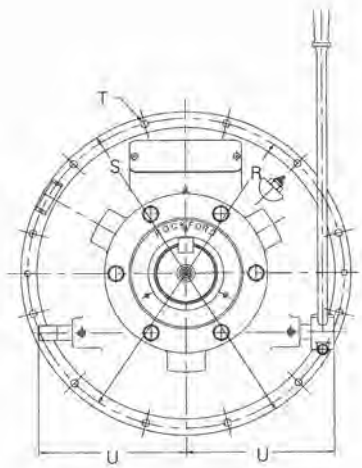

Spread Bearing and Small Engine Power Take-Offs

Spread Bearing Power Take-Offs

Housing Size	Qty. of Facings	Rockford Powertrain Part No.	Maximum RPM	Type of Facing	Clutch Torque Capacity lb-ft*	F	G Keyway	U	V	W	X	Z
14" HD Clutches												
1	3	4-36086	2200	Organic	3150	3.94	1 x 1/2	11.00	4.50	7.75	1.50	3.25
1	3	4-36437	2200	Metallic	4035	3.94	1 x 1/2	11.00	4.50	7.75	1.50	3.25
18" HC Clutches												
0	3	4-36087	2100	Organic	5550	4.50	1 x 1/2	13.70	5.12	10.50	1.25	4.69
0	3	3-36434	2100	Metallic	7095	4.50	1 x 1/2	13.70	5.12	10.50	1.25	4.69

NOTE: Refer to page A8 for dimensions A, C, K, L, M, R, S and T.

With 14" HD Clutches

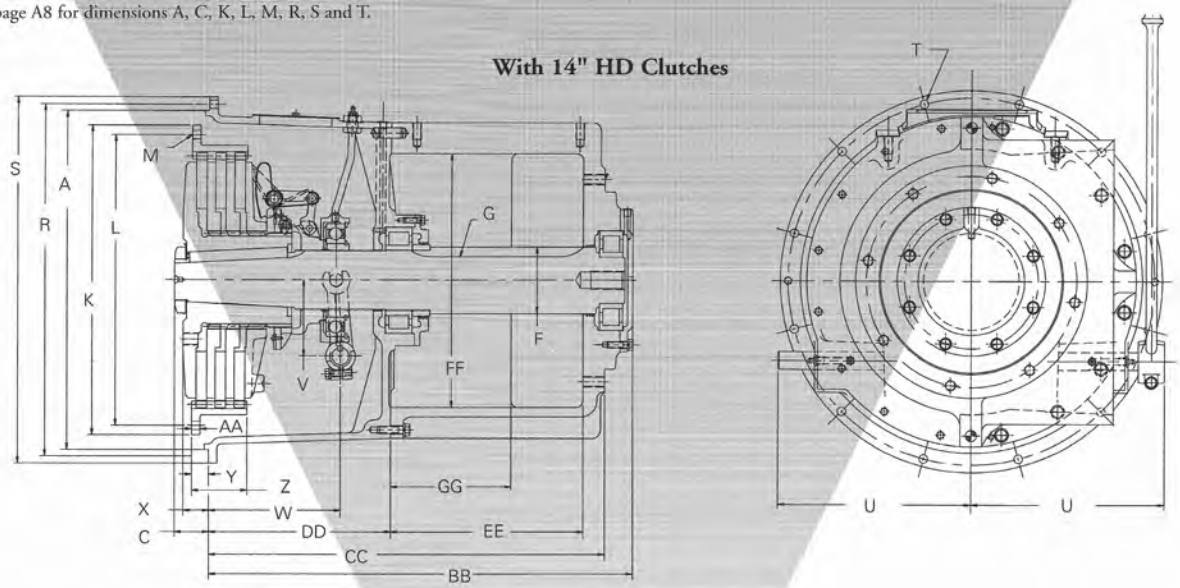

Small Engine Power Take-Offs

"S Series"

PTO Part Number	Wet	Dry	Clutch Torque Capacity lb-ft *	Bore Diameter	Keyway Size	Dim. "A"
4-29982	X		50	1.436-1.437	5/16 x 5/32	30°
4-29983		X	125	1.436-1.437	3/8 x 3/16	26°
4-29984		X	125	1.499-1.500	3/8 x 3/16	26°
4-29985	X		50	1.436-1.437	3/8 x 3/16	26°
4:29986		X	125	1.499-1.500	3/8 x 3/16	30°
4-29987		X	125	1.125-1.126	1/4 x 1/18	26°
4-29988	X		50	1.436-1.437	5/16 x 5/32	26°
4-29989		X	125	1-436-1.437	3/8 x 3/16	30°
4-29995		X	200	1.436-1.437	5/16 x 5/32	26°

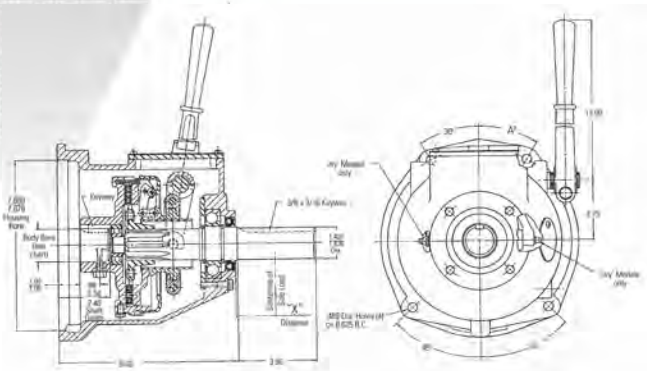

All dimensions are in inches unless otherwise specified.
Listing subject to change without notice.
* Figure listed is torque capacity of the clutch. To determine the actual clutch torque capacity required for any given application, torque service factor must be considered. Refer to page A8.

Illustrations are shown for identification of dimensions only. They are not intended to necessarily depict the actual size, exact shape or internal configuration of the part numbers listed.

Spread Bearing and Small Engine Power Take-Offs

Spread Bearing Power Take-Offs

Rockford Powertrain Part No.	AA	BB	CC	DD	EE	FF	GG
14" HD Clutches							
4-36086	.50	25.00	23.30	10.70	11.23	15.00	7.00 Max.
4-36437	.50	25.00	23.30	10.70	11.23	15.00	7.00 Max.
18" HC Clutches							
4-36087	.62	34.41	31.72	15.13	15.19	19.70	–
4-36434	.62	34.41	31.72	15.13	15.19	19.70	–

With 18" HC Clutches

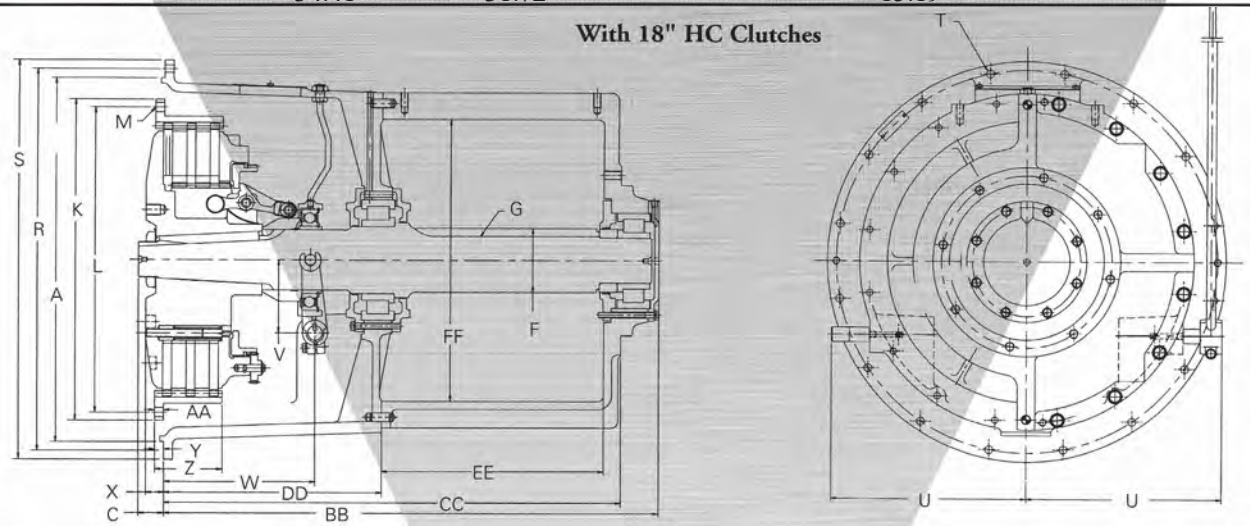

Small Engine Power Take-Offs

"E Series"

PTO Part Number	Wet	Dry	Clutch Torque Capacity lb-ft *	Bore Diameter	Keyway Size
4-28003		X	125	1.000-1.001	1/4 x 1/8
4-28004		X	125	1.125-1.126	1/4 x 1/8
4-28005		X	125	1.436-1.437	3/8 x 3/16
4-27993	X		50	1.000-1.001	1/4 x 1/8
4-27994	X		50	1.125-1.126	1/4 x 1/8
4-27432	X		50	1.436-1.437	3/8 x 3/16

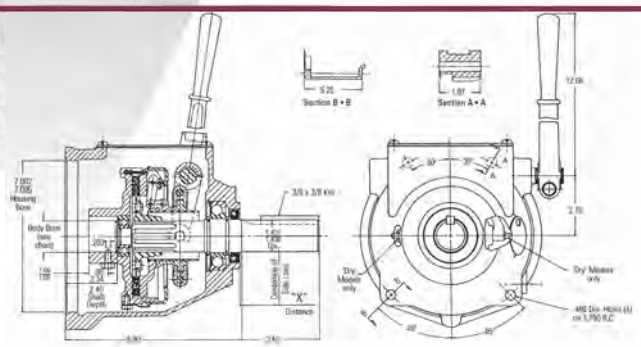

All dimensions are in inches unless otherwise specified.
Listing subject to change without notice.
* Figure listed is torque capacity of the clutch. To determine the actual clutch torque capacity required for any given application, torque service factor must be considered. Refer to page A8.

Illustrations are shown for identification of dimensions only. They are not intended to necessarily depict the actual size, exact shape or internal configuration of the part numbers listed.

S.A.E. Standards

Rockford®-Style and TD-Style Power Take-Offs are designed to S.A.E. standards and must be installed and operated in accordance with S.A.E. standards to insure long, successful operation.

S.A.E. Flywheel Housing Identification

S.A.E. Hsg. No.	Pilot Diameter "A"	O.D. "S"	Bolt Circle "R"	Housing Face to Crankshaft "C"	Flywheel Housing Bolts and Bolt Holes "T" Qty.	Hole Dia.	Bolt Size
0	25.500	28.00	26.75	3.94	16	.547	1/2
1/2	23.000	25.50	24.375	3.94	12	.547	1/2
1	20.125	21.75	20.875	3.94	12	.469	7/16
2	17.625	19.25	18.375	3.94	12	.433	3/8
3	16.125	17.75	16.875	3.94	12	.433	3/8
4	14.250	15.88	15.000	*	12	.433	3/8
5	12.375	14.00	13.125	*	8	.406	3/8
6	10.500	12.12	11.250	2.81	8	.406	3/8

**3.94 for 8" clutch; 2.81 for 6.5" and 7.5" clutch*

All dimensions are in inches unless otherwise specified.

S.A.E. Flywheel Dimensions

Clutch Size	Drive Ring Pilot "K"	Bolt Circle "L"	Housing Face to Flywheel "Y"	Pilot Bearing Bore "O"	Bolt Hole "M" Qty.	Size
6-1/2	8.500	7.875	1.19	2.0472 (52mm)	6	5/16
7-1/2	9.500	8.750	1.19	2.0472 (52mm)	8	5/16
8	10.375	9.625	2.44	2.4409 (62mm)	6	3/8
10	12.375	11.625	2.12	2.8346 (72mm)	8	3/8
11-1/2	13.875	13.125	1.56	2.8346 (72mm)	8	3/8
14	18.375	17.250	1.00	3.1496 (80mm)	8	1/2
14-DP	18.375	17.250	1.00	3.1496 (80mm)	8	1/2
14-3P	18.375	17.250	1.00	3.9370 (100mm)	8	1/2
18	22.500	21.375	.62	3.9370 (100mm)	6	5/8
18-DP	22.500	21.375	.62	3.9370 (100mm)	6	5/8
18-3P	22.500	21.375	.62	4.7244 (120mm)	6	5/8

All dimensions in inches unless otherwise specified.
Listings subject to change without notice.

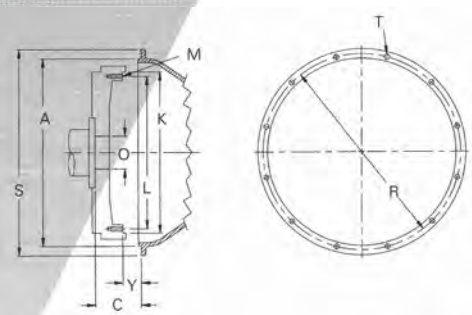

The above illustration is shown for identification of dimensions only.

Required Clutch Torque Capacity Calculation

Required Minimum Clutch Torque Capacity = Maximum Engine Torque x Service Factor

Blower or Vacuum	
- Centrifugal with free flow of air	1.7
- With high start-up inertia or subject to choking of air supply	4.0
Compressors	
- Reciprocating, 1 or 2 cylinders	4.0
- Reciprocating, 3 or more cylinders	2.5
- Roto screw or turbine Conveyor	2.0
- Fed uniformly	1.5
- Not fed uniformly	2.0
- Reciprocating	3.0
Drills	2.0
Generator	2.0
Pump	
- Centrifugal or Turbine	1.5
- Dredge	2.0
- Mud or Reciprocating	3.0
Rock Crusher, Hammer Mill	3.0
Snow Blower	2.0
Wood Chipper, Saw Mill	3.0

Ratings:
Shafts, bearing and dutch capacities are rated on a conservative basis. For unusually heavy starting loads, frequent engagement service, or if prime mover is engine of less than 4 cylinders, consult our sales representatives for recommendations. Extremely low speed engines require special considerations.